MEGA
MACHINE CO., LTD.

MEGA

# BS

M·SA·A
SERIES

# SEMI-AUTOMATIC & AUTOMATIC HORIZONTAL BANDSAWS

**QUALITY DESIGN**—Skillful engineering and imaginative design give every MEGA Band Saw exceptional cutting capacity.

- An excellent blade tensioning system and guides keep the blade aligned and under constant load at all times.
- A hydraulically controlled cutting feed maintains a constant cutting rate regardless of the workpiece cross section.
- A power-driven brush continually flushed by a cutting fluid spout keeps the blade and saw guides free of chips for smoother cutting.
- A quick approach and normal feed rate selector are equipped to cause the blade to quickly descend into position. (A models only)

**SAFETY DESIGN**—Every MEGA Band Saw is factory equipped with:

- Safety and thermal overload switches.
- Well guarded blades and wheel covers.
- Saw Blade shuts off automatically when cutting is complete.
- Low voltage & zero voltage controls.
- A blade breakage sensor/motion detector provides automatic shutoff. (Optional)

# SEMI-AUTOMATIC

**HORIZONTAL-BANDSAWS**
**POWER TURNING TABLE**
**MITRE CUTTING**

## BS-M SERIES

### STANDARD FEATURES

1. Carbide and roller blade guides
2. Automatic head elevation control
3. Power-driven blade cleaning brush
4. Hydraulic quick-setting vise
5. Coolant cleaning flush hose
6. Quick adjusting carbide saw guide
7. Pressure compensation feed-rate control
8. Motorized turn table mitre cutting device


### STANDARD ACCESSORIES

1. Tools with tool box.....1 pc
2. Blade cleaning wire brush..2 pcs
3. Band sawblade.....1 pc
4. Instruction manual.....1 copy

# BS-450M BS-760M


90° 45°

| SPECIFICATION | BS-450M | BS-760M |
|---|---|---|
| CUTTING CAPACITY AT 90° H BEAMS/PIPES | ● SOLID 320 MM DIA.<br>■ SOLID 320×320 SQR.<br>○ 320 MM O.D.<br>□ / H 510 SQR. 510×320 | ● SOLID 460 MM DIA.<br>■ SOLID 460 MM SQR.<br>○ 460 MM O.D.<br>□ / H 760×400 MM |
| MITRE CUTTING AT 60° H BEAMS/PIPES | ● SOLID 300 MM DIA.<br>■ SOLID 300 MM SQR.<br>○ 320 MM DIA.<br>□ / H 357×320 MM | ● SOLID 420 MM DIA.<br>■ SOLID 420 MM SQR.<br>○ 460 MM O.D.<br>□ / H 590×400 MM |
| MITRE CUTTING AT 45° H BEAMS/PIPES | ● SOLID 250 MM DIA.<br>■ SOLID 250 MM SQR.<br>○ 320 MM DIA.<br>□ / H 213×320 MM | ● SOLID 330 MM DIA.<br>■ SOLID 330 MM SQR.<br>○ 460 MM O.D.<br>□ / H 500×400 MM |
| MITRE CUTTING AT 30° H BEAMS/PIPES | ● SOLID 83 MM DIA.<br>■ SOLID 83 MM SQR.<br>○ 83 MM DIA.<br>□ / H 83×320 MM | ● SOLID 220 MM DIA.<br>■ SOLID 220 MM SQR.<br>○ 220 MM O.D.<br>□ / H 220×400 MM |
| BLADE SIZE | 34×1.1×4115 MM<br>1.25×.042×162 IN | 38×1.3×5300 MM<br>1½×.051×209 IN |
| BLADE SPEED M/MIN<br>F/MIN | 25 - 80 M/MIN (50/60HZ)<br>82 - 260 F/MIN (50/60HZ) (Opt.) | 25, 32, 42, 55, 70, 80 MPM<br>82, 105, 138, 180, 230, 260 |
| MOTOR OUTPUT | BLADE 5 HP (3.7 KW)<br>HYD. 1 HP (0.75 KW)<br>CLNT 1/8 HP (0.1 KW) | BLADE 7.5 HP (5.62 KW)<br>HYD. 2 HP (1.5 KW)<br>CLNT 1/4 HP (.19 KW) |
| SHIPPING VOLUMN | 2220×1650×1450 MM | 2805×2300 ×2100 MM |
| WEIGHT Net/Gross | 1770/1970 KGS | 2800/2900 KGS |

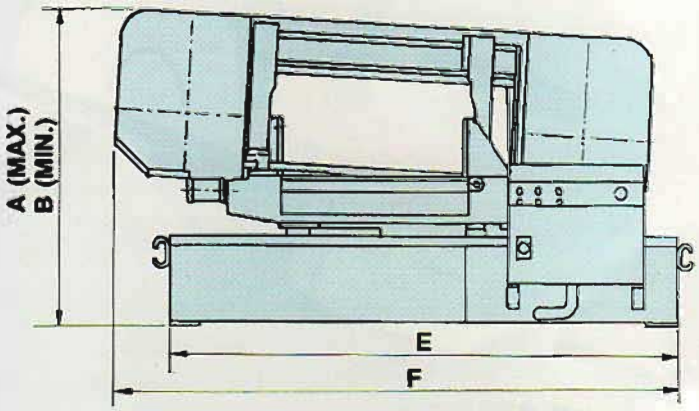


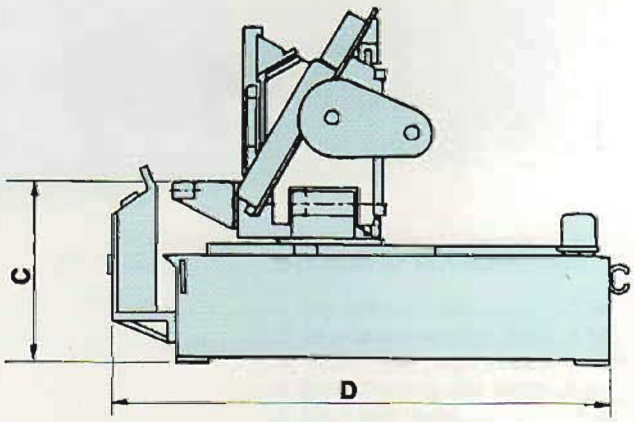


30°

| MODEL/SPEC | A | B | C | D | E | F |
|---|---|---|---|---|---|---|
| BS-450M | 1810 | 1132 | 635 | 1750 | 1930 | 2100 |
| | 71.3" | 44.6" | 25.0" | 68.9" | 76.0" | 82.7" |
| BS-760M | 2400 | 1350 | 630 | 2200 | 2040 | 2600 |
| | 94.5" | 53.1" | 24.8" | 86.6" | 80.3" | 102.4" |

* Specifications subject to change without notice for improvement and modification.

# SEMI-AUTOMATIC

## HORIZONTAL BANDSAWS
## MANUAL BAR FEED

## BS- SA SERIES

### STANDARD FEATURES

1. Carbide and roller blade guides.
2. Automatic head elevation control.
3. Power-driven blade cleaning brush.
4. Hydraulic quick-setting vise.
5. Coolant cleaning flush hose.
6. Unique floating roller feed mechanism.
7. Quick-adjusting carbide saw guide (450 & 1830).
8. Pressure compensation feed-rate control.


### STANDARD ACCESSORIES

1. Tool with tool box.....1 set
2. 5ft (1.5M) long roller table....1 set
3. Cut-off bar and stopper.....1 set
4. Band-Cleaning wire brush...2 pcs
5. Band saw blade.....1 pc
6. Instruction Manual.....1 copy

### OPTIONAL ACCESSORIES

1. Automatic chip conveyor.
2. Variable blade-speed drive.
3. Mitre cutting device.
4. Hydraulic blade tension.
5. Additional spare roller table.

1. CENTRALIZED CONTROL PANEI:
All the machine controls are centralized on a control panel, for the operator's convenience.

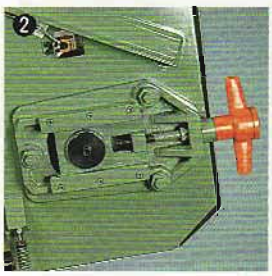

2. QUICK ACTING MECHANICAL BLADE TENSION.
A torque release device is built into the saw to ensure proper tension on the saw blade. Optional hydraulic blade tension also available.

3. BLADE GUIDE DESIGN:
The saw blade is guided by 4 ball bearings and 6 carbide guides to ensure perfect alignment and straightness.

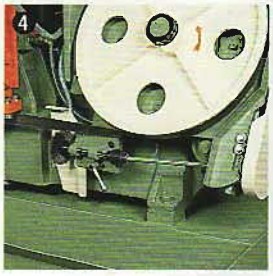

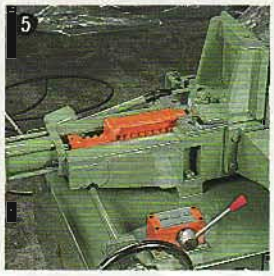

4. POWER-DRIVEN SAW-BAND BRUSH:
A power-driven saw-band brush, continually flushed by a cutting fluid spout, keeps the blade and saw guides free of chips for smoother cutting. A flush hose is available for washing chips and debris away from the cutting area.

5. HYDRAULIC QUICK-ACTION VISE:
Vise are hydraulic operated, tooth-rack and push-jaw features, easily adjusted to accommodate stock size.

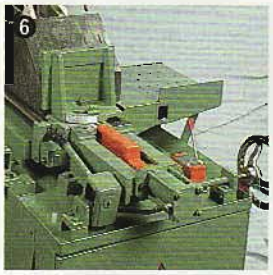

6. FLOATING ROLLER FEED MECHANISM:
With joy stick setting control of vise and floating roller, when opening the vise, the roller comes up, by a hand wheel can feed solid stock, no sweat!

7. AUTOMATIC HEAD ELEVATION CONTROL:
Saw frame will raise automatically up to the height that you preset by a dial knob on the control panel, needed to clear the material being cut.

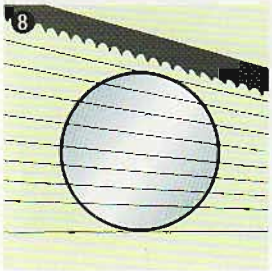

8. UNIQUE FEED-RATE CONTROL:
This unique feed-rate control system with built in temperature and pressure compensation ensures maximum cutting performance. The feedrate control will maintain a constant cutting rate regardless of the work diameter.

| SPECIFICATIONS | MODEL | BS-250SA | BS-300SA | BS-360SA |
|---|---|---|---|---|
| Cutting Capacity | (mm) | Ø260 □300×180 280×250 | Ø330 □350×250 300×300 | Ø400 □400×310 |
| | (in) | Ø10 □12×7 11×10 | Ø13 □13×10 12×12 | Ø16 □16×12 |
| Mitre Cutting | (mm) | Ø180(at 45°) optional | Ø230 (at 45°) optional | Ø280 (at 45°) optional |
| Blade Size | (mm) | 25×0.9×3505 | 25×0.9×3660 | 32×1.06×4115 |
| | (in) | 1×0.035×138 | 1×0.035×144 | 1¼×0.042×162 |
| Blade Speed | (m) | 25, 32, 42, 55, 70, 80 | Variable Speed 20-80M/min (optional) | |
| | (ft) | 82, 105, 138, 180, 230, 260 | Variable Speed 65-260F/min (optional) | |
| Motor Output | (kw) | 3.1 | 3.1 | 4.6 |
| | (hp) | 4-1/8 | 4-1/8 | 6-1/8 |
| Shipping Volume | (mm) | 1920×1130×1370 | 2045×2012×1465 | 2225×1188×1525 |
| | (ft) | 6.3×3.7×4.5 | 6.7×6.6×4.8 | 7.3×3.9×5 |
| Weight Net/Gross | (kb/lb) | 960/1140 2112/2508 | 1010/1220 2220/2685 | 1060/1275 2330/2805 |

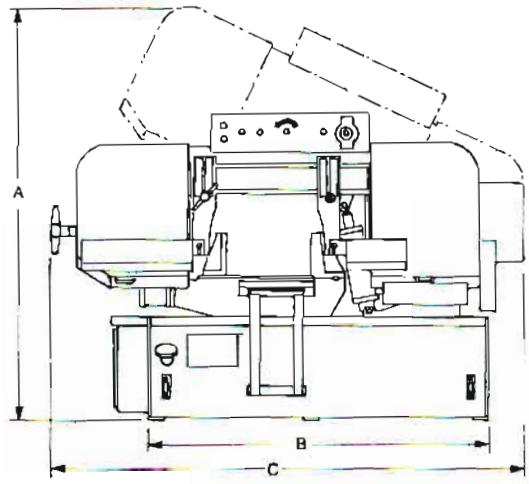


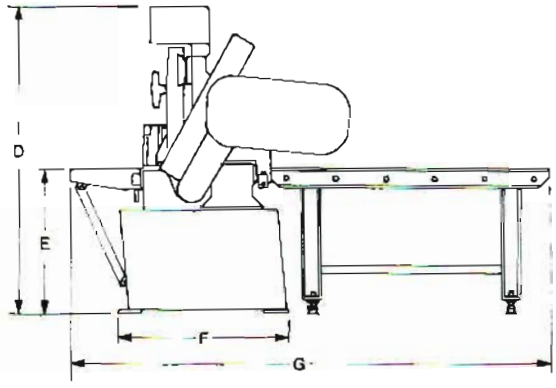


| MODEL \ SPEC. | A | B | C | D | E | F | G |
|---|---|---|---|---|---|---|---|
| BS-250SA | 62" | 50" | 69" | 45" | 22" | 29" | 71" |
| | 1575 | 1525 | 1753 | 1145 | 560 | 740 | 1800 |
| BS-300SA | 75" | 65" | 74" | 51" | 23" | 29" | 71" |
| | 1905 | 1650 | 1880 | 1295 | 585 | 740 | 1800 |
| BS-360SA | 80" | 67" | 82" | 52" | 23" | 29" | 72" |
| | 2030 | 1700 | 2085 | 1320 | 585 | 740 | 1825 |
| BS-450SA | 90" | 71" | 94" | 63" | 27" | 33" | 79" |
| | 2285 | 1805 | 2390 | 1600 | 685 | 850 | 2010 |
| BS-1626 | 86" | 78" | 93" | 52" | 23" | 29" | 91" |
| | 2185 | 1980 | 2365 | 1320 | 585 | 740 | 2310 |
| BS-1830 | 97" | 84" | 107" | 63" | 27" | 33" | 99" |
| | 2465 | 2120 | 2705 | 1600 | 685 | 850 | 2515 |

* Specifications subject to change without notice for improvement and modification

| BS-450SA | BS-1626 | BS-1830 |
|---|---|---|
| Ø460 □460 × 407 | Ø400 □400 × 600 | Ø460 □460 × 760 |
| Ø18 □18 × 16 | Ø16 □16 × 26 | Ø18 □ × 18 × 30 |
| Ø320 (at 45°) optional | Ø400 (at 45°) optional | Ø460 (at 45°) optional |
| 38 × 1.30 × 4670 | 38 × 1.30 × 4670 | 38 × 1.30 × 5300 |
| 1½ × 0.051 × 184 | 1½ × 0.051 × 184 | 1½ × 0.051 × 209 |
| 25, 32, 42, 55, 70, 80 | Variable Speed 20-80M/min (optional) | |
| 82, 105, 138, 180, 230, 260 | Variable Speed 65-260ft/min (optional) | |
| 6.47 | 4.6 | 6.47 |
| 8-5/8 | 6-1/8 | 8-5/8 |
| 2680 × 1220 × 1980 | 2505 × 1188 × 1615 | 3000 × 1220 × 1980 |
| 8.8 × 4.0 × 6.5 | 8.2 × 3.9 × 5.3 | 9.8 × 4.0 × 6.5 |
| 1500/1750 3300/3850 | 1350/1620 2970/3565 | 1650/1910 3630/4205 |

# AUTOMATIC

## HORIZONTAL BANDSAWS
## AUTOMATIC VERTICAL ROLLER BARFEED

## BS- A SERIES

### STANDARD FEATURES

1. Auto mechanical roller bar-feed.
2. Cut off length bar stop.
3. Cutting piece counter with auto-shut-off.
4. Carbide and roller blade guides.
5. Auto head elevation and quick approach control
6. Power driven blade cleaning brush.
7. Coolant cleaning flush hose.
8. Pressure compensation feed-rate control.


### STANDARD ACCESSORIES

1. Tools with box.....1 set
2. 5ft(1.5M) long roller table....1 set
3. Band cleaning wire brush...2 pcs
4. Band saw blade.....1 pc
5. Instruction manual.....1 cpy

### OPTIONAL ACCESSORIES

1. Automatic chip conveyor.
2. Variable blade speed drive.
3. Hydraulic blade tension.
4. Additional spare roller table, wire brush, saw blade, work-area light, etc.

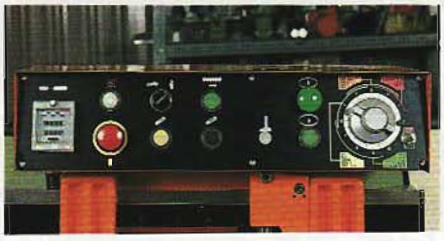

1. CENTRALIZED EASY TO UNDERSTAND CONTROL PANEL:
All the machine controls except the cut off length setting have been centralized on a control panel accessible from either the right or left side of the saw. All the controls are located on the panel plate and are very easy to understand even for an unfamiliar operator.

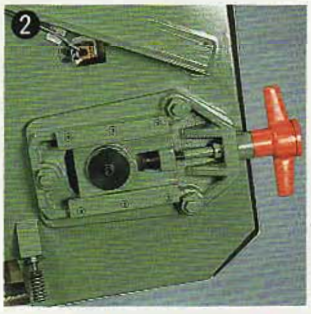

2. QUICK ACTING MECHANICAL BLADE TENSION:
A torque release device is built into the saw to ensure proper tension on the saw blade. Optional hydraulic blade tension also available.

3. BLADE GUIDE DESIGN:
The saw blade is guided by 4 ball bearings and 6 carbide guides to ensure perfect alignment and straightness.

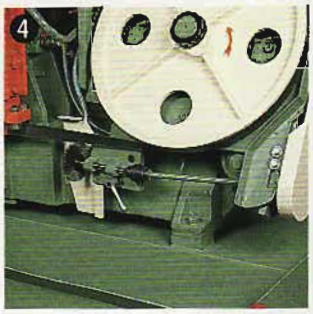

| MODEL \ SPEC. | A | B | C | D | E | F | G |
|---|---|---|---|---|---|---|---|
| BS-250A | 62" | 50" | 69" | 45" | 23" | 29" | 64" |
| | 1575 | 1270 | 1753 | 1145 | 585 | 740 | 1625 |
| BS-300A | 75" | 65" | 74" | 51" | 23" | 29" | 71" |
| | 1905 | 1650 | 1880 | 1295 | 585 | 740 | 1800 |
| BS-360A | 80" | 67" | 82" | 52" | 23" | 29" | 72" |
| | 2030 | 1700 | 2085 | 1320 | 585 | 740 | 1825 |

* Specifications subject to change without notice for improvement and modification.

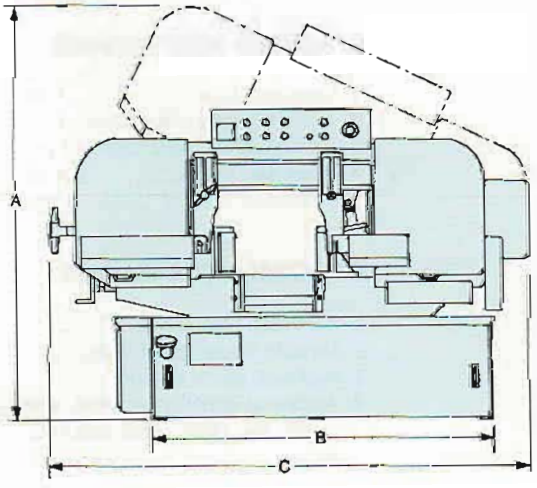


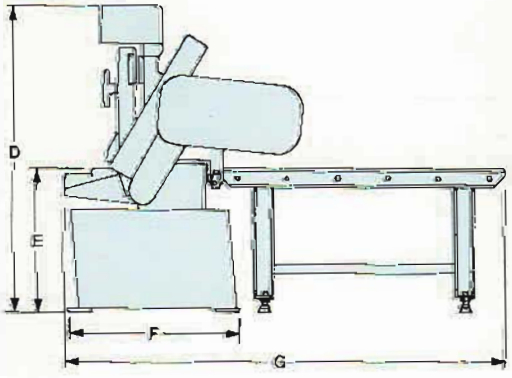

4. POWER-DRIVEN SAW-BAND BRUSH:
A power-driven saw-band brush, continually flushed by a cutting fluid spout. Keeps the blade and saw guides free of chips for smoother cutting. A flush hose is available for washing chips and debris away from the cutting area.

5. AUTOMATIC BAR FEED SYSTEM:
Motor-gear reducer and vertical rollers feed the workpiece to the preset length. It is a stable, precise feed mechanism. There is no need for opening and reclamping the vise for each cut.

6. BLADE SPEED SELECTION:
There are 6 step changeable pulleys providing 6 speed ranges a speed chart is mounted on the pulley guard for user's reference. Optional stepless variable speed change is available.



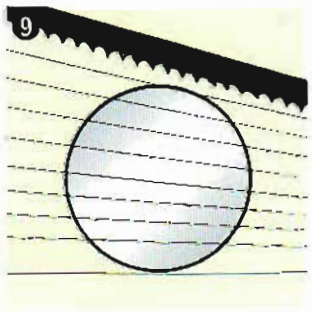


7. CUTTING PIECE COUNTER:
The cutting piece counter is used to preset the number of cuts required on automatic operation. When the counter reaches the preset number the saw automatically stops.

8. AUTO HEAD-ELEVATION AND QUICK APPROACH:
Raising the blade higher than necessary to clear the work for the next cut wastes time. Head elevation is controlled automatically and no longer requires the operator's attention. A control device that senses the size of the workpiece, permits the saw head to raise just high enough so the blade clears the work. This reduces index cycling time significantly.

9. UNIQUE FEED-RATE CONTROL:
This unique feed-rate control system with built-in temperature and pressure compensation ensures maximum cutting performanace. The feed-rate control will maintain a constant cutting rate regardless of the work diameter.

| SPECIFICATIONS \ MODEL | | BS-250A | BS-300A | BS-360A |
|---|---|---|---|---|
| Cutting Capacity | (mm) | Ø260 □300×180 280×250 | Ø310 □310×280 | Ø380 □380×310 |
| | (in) | Ø10 □12×7 11×10 | Ø12 □12×11 | Ø15 □15×12 |
| Bar Feed | | auto bar-feed system | auto bar-feed system | auto bar-feed system |
| Blade Size | (mm) | 25×0.9×3505 | 25×0.9×3660 | 32×1.06×4115 |
| | (in) | 1×0.035×138 | 1×0.035×144 | 1¼×0.042×162 |
| Blade Speed | (m) | 25, 32, 42, 55, 70, 80 | 25, 32, 42, 55, 70, 80 | 25, 32, 42, 55, 70, 80 |
| | (ft) | 82, 105, 138, 180, 230, 260 | 105, 138, 180, 230, 260 | 82, 105, 138, 180, 230, 260 |
| Motor Output | (kw) | 3.1 | 2.34kw 6poles | 4.6kw 4poles |
| | (hp) | 4-1/8 | 3.125hp 6poles | 6-1/8hp 4poles |
| Shipping Volume | (mm) | 1920×1130×1372 | 2045×2012×1465 | 2225×1188×1525 |
| | (ft) | 6.3L×3.7W×4.5H | 6.7×6.6×4.8 | 7.3×3.9×5 |
| Weight Net/Gross | (kg/lb) | 960/1160 2112/2552 | 1015/1225 2335/2700 | 1165/1380 2565/3035 |