Excision®

Dependable **Precision**

Punch & Die Tooling Guide

Excision®

Dependable **Precision**

Excision Punch & Die tooling is produced to exacting standards and are suitable for all types of steelworkers and punching machines. Proven manufacturing techniques and a closely controlled heat treatment process guarantees optimum performance. In addition to our comprehensive range of standard stocked products we can also offer oversized tooling and design solutions for virtually any application.

Dependable Precision Tips

1. It is not recommended to punch material thicker than the diameter of the punch.
2. The punch size is the hole size produced.
3. Clearance of the die should be approximately 10% of the material thickness being punched.
4. The punch does most of the work and will wear quicker than the die. Life can be extended by using Excision & Punch Die Lubricant.
5. Alignment of punch and dies is very important, extra care is needed on pivoting punch machines.
6. Ensure the punch and die are securely mounted.
7. Make sure the stripper plate is as close to the material as practical.

Safety Tips

Always use eye protection.

Always wear hand protection.

Always make sure power is turned off while changing tooling.

Disclaimer

Information provided in this catalogue is current and correct at the time of publication. Products throughout catalogue are for illustrative purposes only and are not to scale.

Round or Square Die Clearance Guide:

The following guide can be used as a die clearance guide when punching.

Material Thickness	mm	Up to 4	4-9.5	10-14.5	15-19.5	20-24
Die Clearance	mm	0.2	0.7	1.2	1.7	2.2

Note: When you have determined the "Die Clearance" you require, you will need to add this amount to the punch size you are using: Refer example below

Example 1:	Punch round	Ø20mm
	Material thickness	12mm
	Die clearance	1.2mm
	Ø20mm + 1.2mm =	21.2mm
	Die required	21.2mm
Example 2:	Punch square	14x14mm
	Material thickness	8mm
	Die clearance	0.7mm
	18x18mm + 0.7mm =	14.7mm
	Die required	14.7x14.7mm

GROUP 1

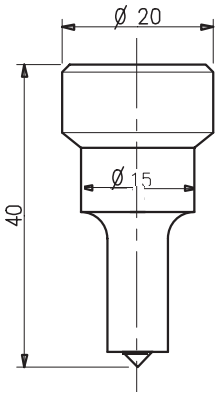

24101 - PUNCH

	3, 4, 5, 6, 7, 8, 9, 10, 11, 12, 13, 14, 15mm
	6x15, 8x15, 10x15mm
	3, 4, 5, 6, 7, 8, 9, 10mm

Other shapes & sizes made to order.

COMPATIBLE TO :
Mubea, Sunrise (before 2002), Metalmaster

GROUP 2

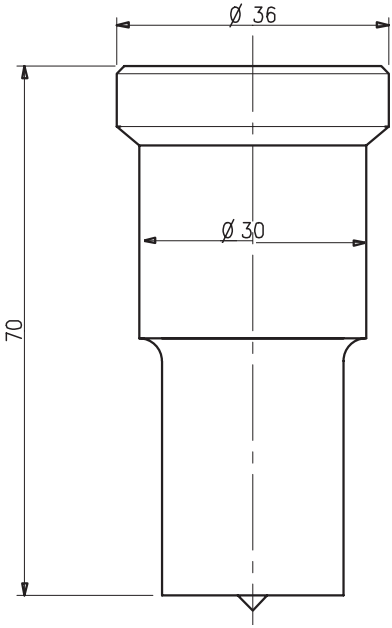

24102 - PUNCH

	3, 4, 5, 6, 7, 8, 9, 10, 11, 12, 13, 14, 15, 16, 17, 18, 19, 20, 21, 22, 23, 24, 25, 26, 27, 28, 29, 30mm
	6x20, 6x25, 6x30, 8x20, 8x25, 8x30, 10x20, 10x25, 10x30, 12x20, 12x25, 12x30, 14x20, 14x25, 14x30, 16x20, 16x25, 16x30, 18x25, 18x30, 20x30, 22x30, 24x30mm
	3, 4, 5, 6, 7, 8, 9, 10, 11, 12, 13, 14, 15, 16, 17, 18, 19, 20, 21mm

Other shapes & sizes made to order.

COMPATIBLE TO :
Mubea, Sunrise (before 2002), Metalmaster, Marksman, Metalex

24103 - PUNCH

	31, 32, 33, 34, 35, 36, 37, 38, 39, 40mm
	10 x38, 10x40, 12x38, 12x40, 14x38, 14x40, 15x40, 16x38, 16x40, 18x38, 18x40, 20x38, 20x40, 22x38, 22x40, 24x38, 24x40, 26x38, 26x40mm
	22, 23, 24, 25, 26, 27mm

Other shapes & sizes made to order.

COMPATIBLE TO :
Mubea, Sunrise, Metalmaster

GROUP 3

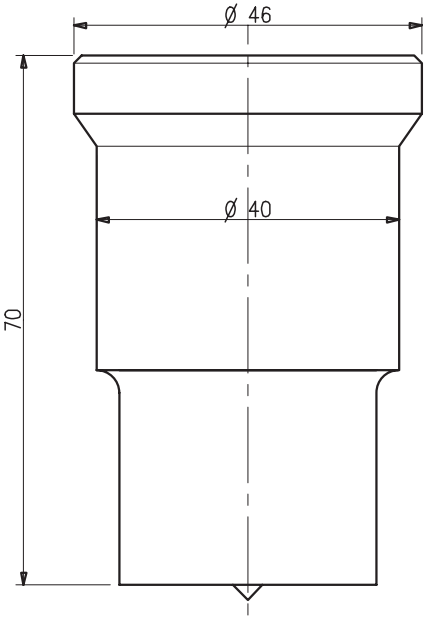

24104 - PUNCH

	40, 41, 42, 43, 44, 45, 46, 47, 48, 49, 50mm
	14x50, 15x50, 18x50, 22x50, 27x50, 28x50mm
	28, 29, 30, 31, 32, 33, 34, 35mm

Other shapes & sizes made to order.

COMPATIBLE TO :
Mubea, Sunrise, Metalmaster

GROUP 4

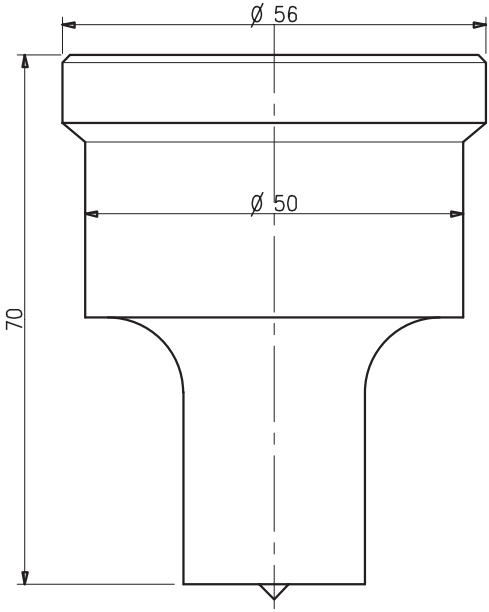

Excision®
Dependable Precision
Freecall **1800 633 448**

210/13

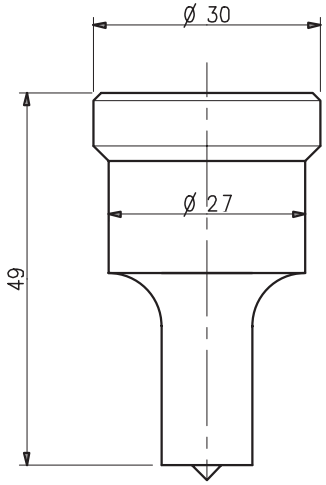

24105 - PUNCH

	3, 4, 5, 6, 7, 8, 9, 10, 11, 12, 13, 14, 15, 16, 17, 18, 19, 20, 21, 22, 23, 24, 25, 26, 27mm
	6x20, 6x25, 8x20, 8x25, 10x20, 10x25, 12x20, 12x25, 14x20, 14x25, 16x25, 18x25mm
	3, 4, 5, 6, 7, 8, 9, 10, 11, 12, 13, 14, 15, 16, 17, 18, 19mm

Other shapes & sizes made to order.

COMPATIBLE TO :
Peddinghaus 210/11, 210/13, Ficep 13, Kippen

210/16

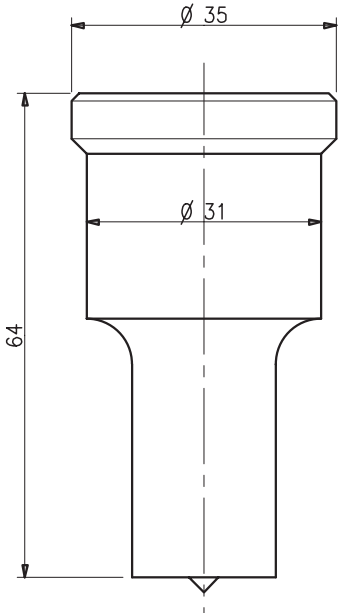

24106 - PUNCH

	3, 4, 5, 6, 7, 8, 9, 10, 11, 12, 13, 14, 15, 16, 17, 18, 19, 20, 21, 22, 23, 24, 25, 26, 27, 28, 29, 30, 31mm
	6x20, 6x25, 6x30, 8x20, 8x25, 8x30, 10x20, 10x25, 10x30, 12x16, 12x20, 12x25, 12x30, 13x30, 14x18, 14x20, 14x25, 14x28, 14x30, 16x25, 16x30, 18x25, 18x30, 20x30, 22x30, 24x30mm
	3, 4, 5, 6, 7, 8, 9, 10, 11, 12, 13, 14, 15, 16, 17, 18, 19, 20, 21mm

Other shapes & sizes made to order.

COMPATIBLE TO :
Peddinghaus 210/16, 210/20, Sunrise (after 2002), Geka 8(16), Durma, IMS, Gairu, Kingsland 9001, Scotchman

24107 - PUNCH

	3, 4, 5, 6, 7, 8, 9, 10, 11, 12, 13, 14, 15, 16, 17, 18, 19, 20, 21, 22, 23, 24, 25, 26, 27, 28, 29, 30, 31, 32, 33, 34, 35, 36, 37, 38mm
	6x20, 6x25, 6x30, 8x20, 8x25, 8x30, 10x20, 10x25, 10x30, 10x38, 12x20, 12x25, 12x30, 12x38, 14x20, 14x25, 14x30, 14x38, 16x25, 16x30, 16x38, 18x25, 18x30, 18x38, 20x30, 20x38, 22x30, 22x38, 24x30, 24x38, 26x38mm
	3, 4, 5, 6, 7, 8, 9, 10, 11, 12, 13, 14, 15, 16, 17, 18, 19, 20, 21, 22, 23, 24, 25, 26mm

Other shapes & sizes made to order.

COMPATIBLE TO :
All Kingsland machines

9004

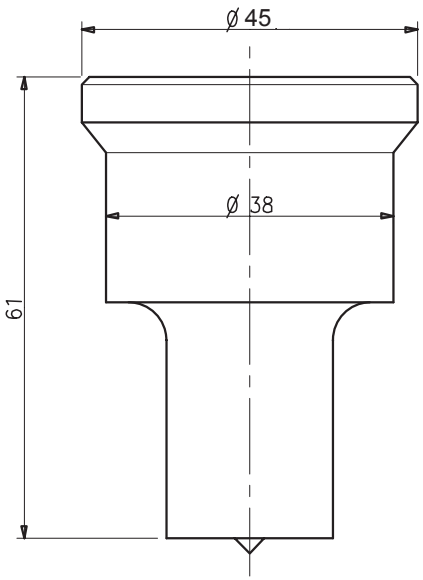

24108 - PUNCH

	3, 4, 5, 6, 7, 8, 9, 10, 11, 12, 13, 14, 15, 16, 17, 18, 19, 20, 21, 22, 23, 24, 25, 26, 27, 28, 29, 30, 31, 32, 33, 34, 35, 36, 37, 38, 39, 40mm
	6x20, 6x25, 6x30, 8x20, 8x25, 8x30, 10x20, 10x25, 10x30, 10x38, 12x20, 12x25, 12x30, 12x38, 14x20, 14x25, 14x30, 14x38, 16x25, 16x30, 16x38, 18x25, 18x30, 18x38, 20x30, 20x38, 22x30, 22x38, 24x30, 24x38, 26x38mm
	3, 4, 5, 6, 7, 8, 9, 10, 11, 12, 13, 14, 15, 16, 17, 18, 19, 20, 21, 22, 23, 24, 25, 26mm

Other shapes & sizes made to order.

COMPATIBLE TO :
All Kingsland machines

9006

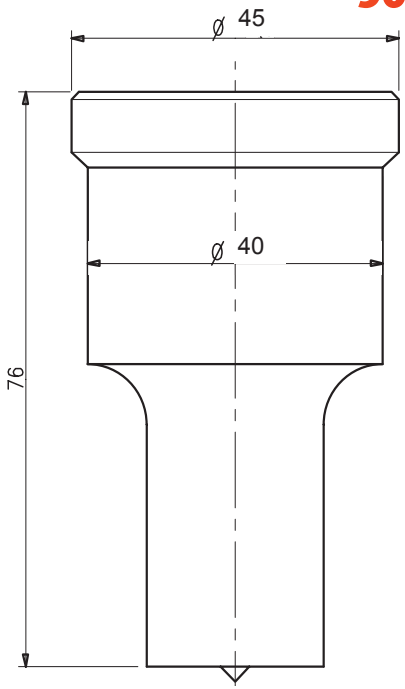

Excision® Dependable Precision
Freecall **1800 633 448**

GEKA 13/6

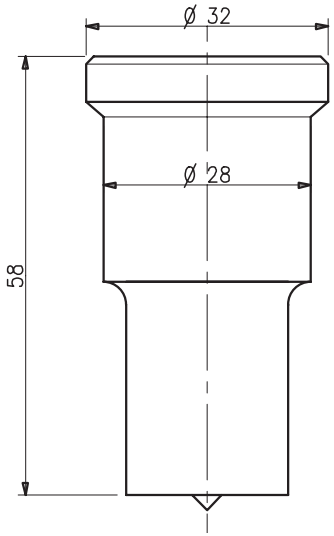

24109 - PUNCH

	3, 4, 5, 6, 7, 8, 9, 10, 11, 12, 13, 14, 15, 16, 17, 18, 19, 20, 21, 22, 23, 24, 25, 26, 27, 28mm
	6x20, 6x25, 8x20, 8x25, 10x20, 10x25, 10x28, 12x20, 12x25, 12x28, 14x20, 14x25, 14x28, 16x20, 16x25, 16x28, 18x25, 18x28, 20x28, 22x28mm (with 6mm keyway)
	3, 4, 5, 6, 7, 8, 9, 10, 11, 12, 13, 14, 15, 16, 17, 18, 19mm (with 6mm keyway)

Other shapes & sizes made to order.

COMPATIBLE TO :
Geka, Edwards, Piranha

GEKA 8/40

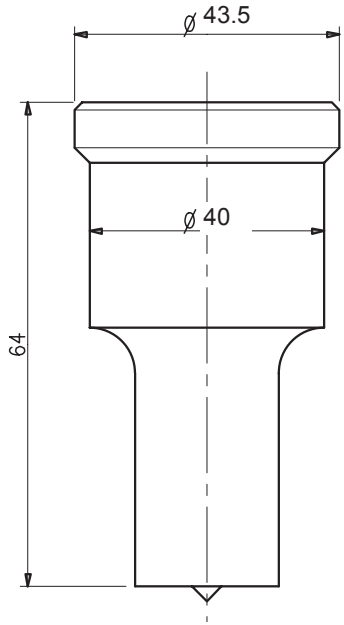

24122 - PUNCH

	32, 33, 34, 35, 36, 37, 38, 39, 40mm
	10x38, 10x40, 12x38, 12x40, 14x38, 14x40, 16x38, 16x40, 18x38, 18x40, 20x40, 20x38, 22x38, 22x40, 24x38, 24x40, 26x38, 26x40mm
	21, 22, 23, 24, 25, 26, 27, 28mm

Other shapes & sizes made to order.

COMPATIBLE TO :
Geka, Durma

24110 - PUNCH

	3, 4, 5, 6, 7, 8, 9, 10, 11, 12, 13, 14, 15, 16, 17, 18, 19, 20, 21, 22, 23, 24, 25mm
	6x20, 6x24, 8x20, 8x24, 10x20, 10x24, 12x20, 12x24, 14x20, 14x24, 16x24, 18x24,
	3, 4, 5, 6, 7, 8, 9, 10, 11, 12, 13, 14, 15, 16mm

Other shapes & sizes made to order.

COMPATIBLE TO :
Nitto-Kohki, Selfer, Alfra

ALFRA/NITTO

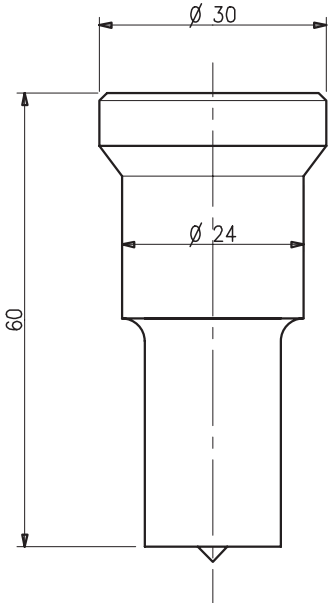

Need a punch and die specially made?

Can't find what you need?

Turn to page 23 for your custom order form.

Remember, think punch and dies,

think Excision.

Excision® Dependable Precision

Freecall **1800 633 448**

4014C

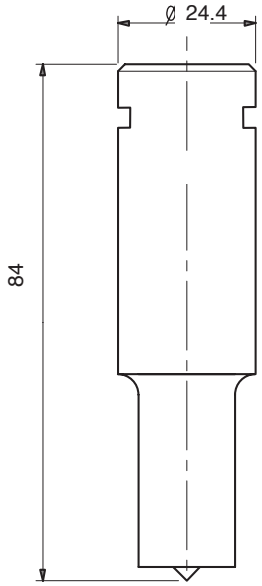

24123 - PUNCH

	8, 10, 12, 14, 16, 18, 22mm
	Sizes available on request up to 24mm
	Sizes available on request up to 17mm

Other shapes & sizes made to order.

COMPATIBLE TO :
Scotchman

SHARP 505N

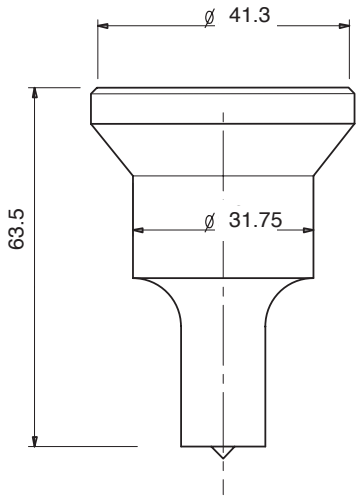

24124 - PUNCH

	8, 10, 12, 14, 16, 18, 22mm
	Sizes available on request up to 31mm
	Sizes available on request up to 22mm

Other shapes & sizes made to order.

COMPATIBLE TO :
Sharp 505

24111 - PUNCH

	3, 4, 5, 6, 7, 8, 9, 10, 11, 12, 13, 14, 15, 16, 17, 18, 19, 20, 21, 22, 23, 24, 25, 26, 27, 28, 29, 30mm
	6x20, 6x25, 6x30, 8x20, 8x25, 8x30, 10x20, 10x25, 10x30, 12x20, 12x25, 12x30, 14x20, 14x25, 14x30, 16x25, 16x30, 18x25, 18x30, 20x30, 22x30, 24x30mm
	3, 4, 5, 6, 7, 8, 9, 10, 11, 12, 13, 14, 15, 16, 17, 18, 19, 20, 21mm

Other shapes & sizes made to order.

COMPATIBLE TO :
Omera 13, Thomas

OMERA 13

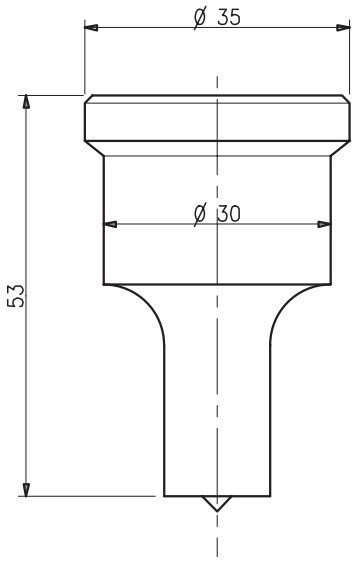

24112 - PUNCH

	3, 4, 5, 6, 7, 8, 9, 10, 11, 12, 13, 14, 15, 16, 17, 18, 19, 20, 21, 22, 23, 24, 25, 26, 27, 28, 29, 30, 31, 32, 33, 34, 35mm
	6x20, 6x25, 6x30, 8x20, 8x25, 8x30, 10x20, 10x25, 10x30, 10x35, 12x20, 12x25, 12x30, 12x35, 14x20, 14x25, 14x30, 14x35, 16x25, 16x30, 16x35, 18x25, 18x30, 18x35, 20x30, 20x35, 22x30, 22x35, 24x30, 24x35, 26x35mm
	3, 4, 5, 6, 7, 8, 9, 10, 11, 12, 13, 14, 15, 16, 17, 18, 19, 20, 21, 22, 23, 24mm

Other shapes & sizes made to order.

COMPATIBLE TO :
Omera 16, Thomas

OMERA 16

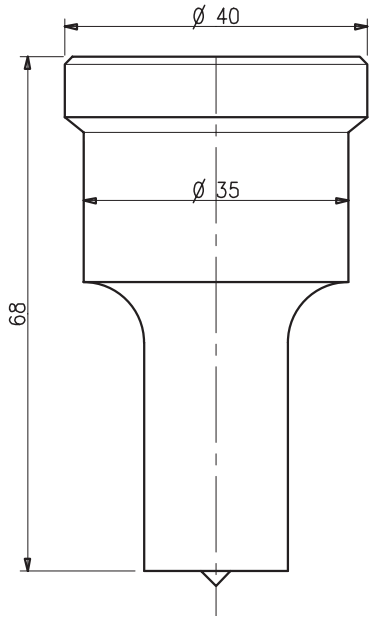

FICEP 14

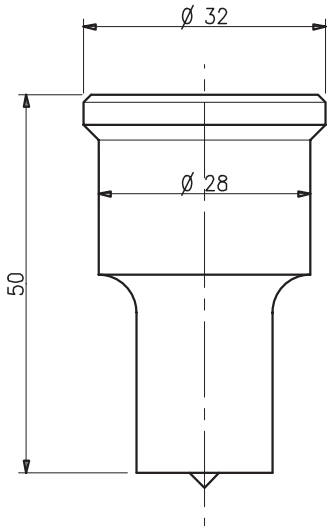

24115 - PUNCH

	3, 4, 5, 6, 7, 8, 9, 10, 11, 12, 13, 14, 15, 16, 17, 18, 19, 20, 21, 22, 23, 24, 25, 26, 27, 28mm
	6x20, 6x25, 6x28, 8x20, 8x25, 8x28, 10x20, 10x25, 10x28, 12x20, 12x25, 12x28, 14x20, 14x25, 14x28, 16x25, 16x28, 18x25, 18x28, 20x28, 22x28mm
	3, 4, 5, 6, 7, 8, 9, 10, 11, 12, 13, 14, 15, 16, 17, 18, 19mm

Other shapes & sizes made to order.

COMPATIBLE TO :
Ficep

FICEP 16

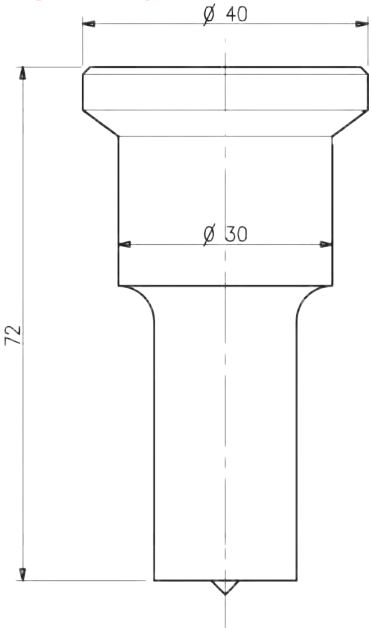

24116 - PUNCH

	3, 4, 5, 6, 7, 8, 9, 10, 11, 12, 13, 14, 15, 16, 17, 18, 19, 20, 21, 22, 23, 24, 25, 26, 27, 28, 29, 30mm
	6x20, 6x25, 6x30, 8x20, 8x25, 8x30, 10x20, 10x25, 10x30, 12x20, 12x25, 12x30, 14x20, 14x25, 14x30, 16x25, 16x30, 18x25, 18x30, 20x30, 22x30, 24x30mm
	3, 4, 5, 6, 7, 8, 9, 10, 11, 12, 13, 14, 15, 16, 17, 18, 19, 20, 21mm

Other shapes & sizes made to order.

COMPATIBLE TO :
Ficep

24119 - PUNCH

23N/8

	2, 3, 4, 5, 6, 7, 8, 9, 10, 11, 12, 13, 14, 15, 16, 17, 18, 19, 20mm
	Oblong sizes up to 10mm made to order
	3, 4, 5, 6, 7mm

Other shapes & sizes made to order.

COMPATIBLE TO :
Bramley, Ehoma P6, Mubea Hand Punch

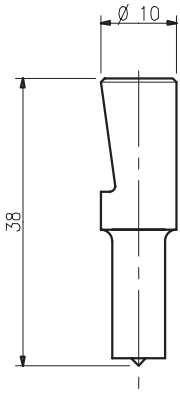

24120 - PUNCH

22N/16

	3, 4, 5, 6, 7, 8, 9, 10, 11, 12, 13, 14, 15, 16, 17, 18, 19, 20mm
	Oblong sizes up to 20mm made to order
	3, 4, 5, 6, 7, 8, 9, 10, 11, 12, 13, 14mm

Other shapes & sizes made to order.

COMPATIBLE TO :
Ehoma P10, Mubea Hand Punch

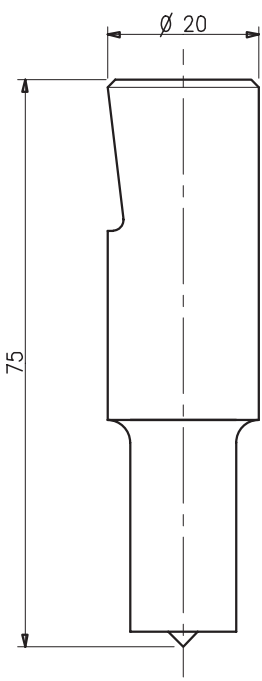

GROUP 1

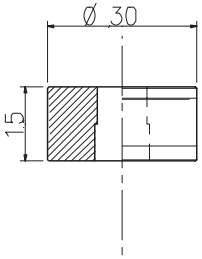

24201 - DIE

	3, 4, 5, 6, 7, 8, 9, 10, 11, 12, 13, 14, 15mm
	6x15, 8x15, 10x15mm
	3, 4, 5, 6, 7, 8, 9, 10mm

Other shapes & sizes made to order.

COMPATIBLE TO :
Mubea, Sunrise, Metalmaster

GROUP 2

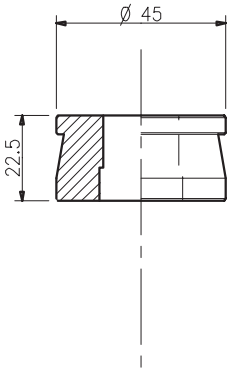

24202 - DIE

	3, 4, 5, 6, 7, 8, 9, 10, 11, 12, 13, 14, 15, 16, 17, 18, 19, 20, 21, 22, 23, 24, 25, 26, 27, 28, 29, 30mm
	6x20, 6x25, 6x30, 8x20, 8x25, 8x30, 10x20, 10x25, 10x30, 12x20, 12x25, 12x30, 14x20, 14x25, 14x30, 16x20, 16x25, 16x30, 18x25, 18x30, 20x30, 22x30, 24x30mm
	3, 4, 5, 6, 7, 8, 9, 10, 11, 12, 13, 14, 15, 16, 17, 18, 19, 20, 21mm

Other shapes & sizes made to order.

COMPATIBLE TO :
Mubea, Sunrise (before 2002), Metalmaster, Marksman

NO. 8

24221 - DIE

	3, 4, 5, 6, 7, 8, 9, 10, 11, 12, 13, 14, 15, 16, 17, 18, 19, 20, 21, 22, 23, 24, 25, 26, 27, 28, 29, 30, 31, 32, 33, 34, 35, 36, 37, 38, 39, 40mm
	6x20, 6x25, 6x30, 8x20, 8x25, 8x30, 10x20, 10x25, 10x30, 10x38, 12x20, 12x25, 12x30, 12x38, 14x20, 14x25, 14x30, 14x38, 16x25, 16x30, 16x38 18x25, 18x30, 18x38, 20x30, 20x38, 22x30, 22x38, 24x30, 24x38, 26x38mm
	3, 4, 5, 6, 7, 8, 9, 10, 11, 12, 13, 14, 15, 16, 17, 18, 19, 20, 21, 22, 23, 24, 25, 26, 27, 28mm

Other shapes & sizes made to order.

COMPATIBLE TO :
Kingland 9024, Mubea Group 3, Marksman, Sunrise, Metalmaster, Geka, Durma

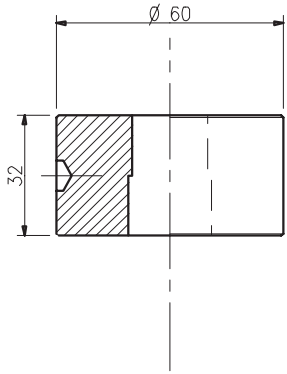

GROUP 4

24204 - DIE

	40, 41, 42, 43, 44, 45, 46, 47, 48, 49, 50mm
	14x50, 15x50, 18x50, 22x50, 27x50, 28x50mm
	28, 29, 30, 31, 32, 33, 34, 35mm

Other shapes & sizes made to order.

COMPATIBLE TO :
Mubea, Sunrise, Metalmaster

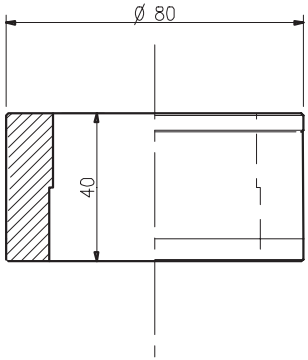

210/13

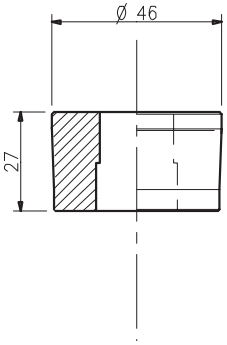

24205 - DIE

	3, 4, 5, 6, 7, 8, 9, 10, 11, 12, 13, 14, 15, 16, 17, 18, 19, 20, 21, 22, 23, 24, 25, 26, 27, 28, 29, 30mm
	6x20, 6x25, 8x20, 8x25, 10x20, 10x25, 10x28, 10x30, 12x16, 12x20, 12x25, 12x28, 12x30, 14x20, 14x25, 14x28, 14x30, 16x25, 16x28, 18x25, 18x30, 18x28, 20x28, 20x30, 22x28, 22x30, 24x30mm
	3, 4, 5, 6, 7, 8, 9, 10, 11, 12, 13, 14, 15, 16, 17, 18, 19mm

Other shapes & sizes made to order.

COMPATIBLE TO :
Peddinghaus 210/11, 210/13, Sunrise (after 2002), Geka, Edwards, Piranha, Kippen

210/16

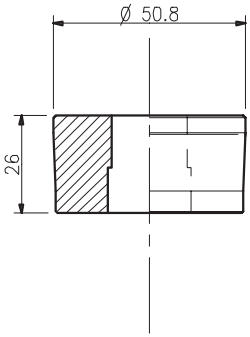

24206 - DIE

	3, 4, 5, 6, 7, 8, 9, 10, 11, 12, 13, 14, 15, 16, 17, 18, 19, 20, 21, 22, 23, 24, 25, 26, 27, 28, 29, 30, 31mm
	6x20, 6x25, 6x30, 8x20, 8x25, 8x30, 10x20, 10x25, 10x30 12x20, 12x25, 12x30, 14x20, 14x25, 14x30, 16x25, 16x30, 18x25, 18x30, 20x30, 22x30, 24x30mm
	3, 4, 5, 6, 7, 8, 9, 10, 11, 12, 13, 14, 15, 16, 17, 18, 19, 20, 21, 22mm

Other shapes & sizes made to order.

COMPATIBLE TO :
Peddinghaus 210/16, 210/20, IMS, Gairu, Scotchman

ALFRA/NITTO

24210 - DIE

	3, 4, 5, 6, 7, 8, 9, 10, 11, 12, 13, 14, 15, 16, 17, 18, 19, 20, 21, 22, 23, 24, 25mm
	6x20, 6x24, 8x20, 8x24, 10x20, 10x24, 12x20, 12x24, 14x20, 14x24, 16x24, 18x24mm
	3, 4, 5, 6, 7, 8, 9, 10, 11, 12, 13, 14, 15, 16mm

Other shapes & sizes made to order.

COMPATIBLE TO :
Nitto-Kohki, Selfer, Alfra

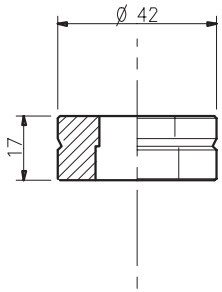

OMERA 13

24211 - DIE

	3, 4, 5, 6, 7, 8, 9, 10, 11, 12, 13, 14, 15, 16, 17, 18, 19, 20, 21, 22, 23, 24, 25, 26, 27, 28, 29, 30mm
	6x20, 6x25, 6x30, 8x20, 8x25, 8x30, 10x20, 10x25, 10x30, 12x20, 12x25, 12x30, 14x20, 14x25, 14x30, 16x25, 16x30, 18x25, 18x30, 20x30, 22x30, 24x30mm
	3, 4, 5, 6, 7, 8, 9, 10, 11, 12, 13, 14, 15, 16, 17, 18, 19, 20, 21mm

Other shapes & sizes made to order.

COMPATIBLE TO :
Omera 13, Thomas

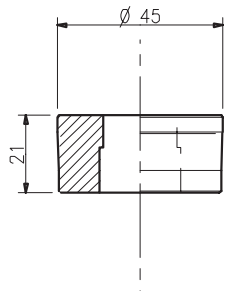

OMERA 16

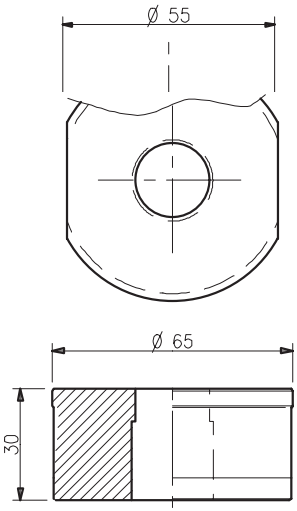

24212 - DIE

	3, 4, 5, 6, 7, 8, 9, 10, 11, 12, 13, 14, 15, 16, 17, 18, 19, 20, 21, 22, 23, 24, 25, 26, 27, 28, 29, 30, 31, 32, 33, 34, 35mm
	6x20, 6x25, 6x30, 8x20, 8x25, 8x30, 10x20, 10x25, 10x30, 10x35, 12x20, 12x25, 12x30, 12x35, 14x20, 14x25, 14x30, 14x35, 16x25, 16x30, 16x35, 18x25, 18x30, 18x35, 20x30, 20x35, 22x30, 22x35, 24x30, 24x35, 26x35mm
	3, 4, 5, 6, 7, 8, 9, 10, 11, 12, 13, 14, 15, 16, 17, 18, 19, 20, 21, 22, 23, 24mm

Other shapes & sizes made to order.

COMPATIBLE TO :
Omera 16, Thomas

FICEP 13

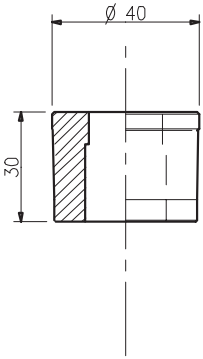

24213 - DIE

	3, 4, 5, 6, 7, 8, 9, 10, 11, 12, 13, 14, 15, 16, 17, 18, 19, 20, 21, 22, 23, 24, 25, 26, 27mm
	6x20, 6x25, 8x20, 8x25, 10x20, 10x25, 12x20, 12x25, 14x20, 14x25, 16x25, 18x25mm
	3, 4, 5, 6, 7, 8, 9, 10, 11, 12, 13, 14, 15, 16, 17, 18, 19mm

Other shapes & sizes made to order.

COMPATIBLE TO :
Ficep

24215 - DIE

FICEP 14

	3, 4, 5, 6, 7, 8, 9, 10, 11, 12, 13, 14, 15, 16, 17, 18, 19, 20, 21, 22, 23, 24, 25, 26, 27, 28mm
	6x20, 6x25, 6x28, 8x20, 8x25, 8x28, 10x20, 10x25, 10x28, 12x20, 12x25, 12x28, 14x20, 14x25, 14x28, 16x25, 16x28, 18x25, 18x28, 20x28, 22x28mm
	3, 4, 5, 6, 7, 8, 9, 10, 11, 12, 13, 14, 15, 16, 17, 18, 19mm

Other shapes & sizes made to order.

COMPATIBLE TO :
Ficep

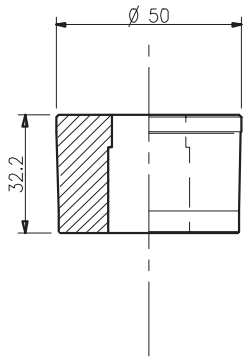

DIES

24216 - DIE

FICEP 16

	3, 4, 5, 6, 7, 8, 9, 10, 11, 12, 13, 14, 15, 16, 17, 18, 19, 20, 21, 22, 23, 24, 25, 26, 27, 28, 29, 30mm
	6x20, 6x25, 6x30, 8x20, 8x25, 8x30, 10x20, 10x25, 10x30, 12x20, 12x25, 12x30, 14x20, 14x25, 14x30, 16x25, 16x30, 18x25, 18x30, 20x30, 22x30, 24x30mm
	3, 4, 5, 6, 7, 8, 9, 10, 11, 12, 13, 14, 15, 16, 17, 18, 19, 20, 21mm

Other shapes & sizes made to order.

COMPATIBLE TO :
Ficep

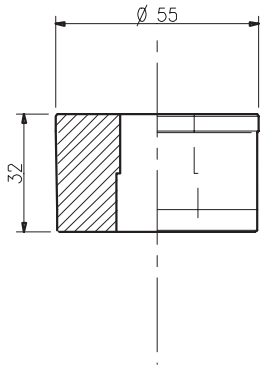

23N/8

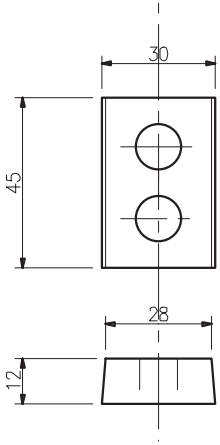

24219 - DIE

	2, 3, 4, 5, 6, 7, 8, 9, 10, 11, 12, 13, 14, 15, 16, 17, 18, 19, 20mm
	Oblong sizes up to 10mm made to order
	3, 4, 5, 6, 7mm

Other shapes & sizes made to order.

COMPATIBLE TO :
Bramley, Ehoma, Mubea Hand Punch

22N/16

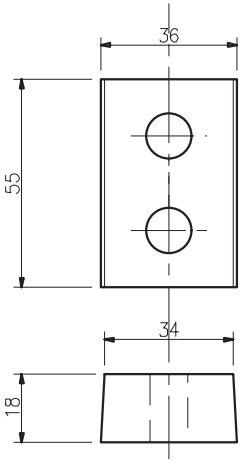

24220 - DIE

	3, 4, 5, 6, 7, 8, 9, 10, 11, 12, 13, 14, 15, 16, 17, 18, 19, 20mm
	Oblong sizes up to 20mm made to order
	3, 4, 5, 6, 7, 8, 9, 10, 11, 12, 13, 14mm

Other shapes & sizes made to order.

COMPATIBLE TO :
Ehoma, Mubea Hand Punch

Excision®

Dependable **Precision**

PUNCH & DIE TOOLING TO SUIT:

Alfra
Coburn
Comaco
Diacro
Durma
Dvorak
Edwards
Enerpac
Fabryka
Fabtech
Femco
Ficep
Gairu
Geka
Henry Pels
IMS
Isumi
J.R. 65
Jing Jang
Kippen
Kingsland
Madison
Marksman
Machine Maker
Metalmaster
Mubea
Nitto Kohki
Nova Press
Omes
Omera
Peddinghaus
Pacific
Piranha
Pullmax
Punchtech
QPS
Rocky
Sahinler
Samurai
Scotchman
Selfer
Sharp
Stanko
Sunrise
Suresharp
Thomas
TSP (hot work)
Uni-hydro
Valdarno
Vitte
Weidemann

INSIST ON PREMIUM EXCISION TOOLING!

Excision®
Dependable Precision

Phone: 1800 633 448
Fax: 03 5571 1944
Email: sales@excision.com.au

PUNCH & DIE SPECIALISTS

PUNCH & DIE SIZE FORM

Please complete and return. Thank you

Company Name:	
Address:	
Telephone:	Fax/Email:
Contact Person:	
Machine Type & Model:	
Size of Punches and Dies Required:	

Please add dimensions to the drawing below:

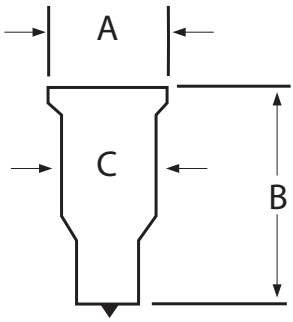

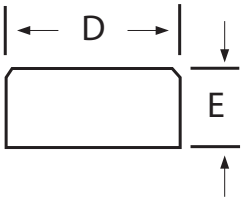

A	
B	
C	

D	
E	

Dimensions in mm.
If you have more than one machine, please make a copy of this.

Excision®

Dependable **Precision**

T **1800 633 448** **F** 03 5571 1944
E sales@excision.com.au
A 35 Peck Street, Hamilton VIC 3300
P PO Box 807, Hamilton VIC 3300
W excision.com.au

Your distributor: